PARTS MANUAL

Refrigerator

HRZ113SS HA AA

Product Code
61144-A

AU NZ

Haier

SHELF & DOOR COMPONENTS

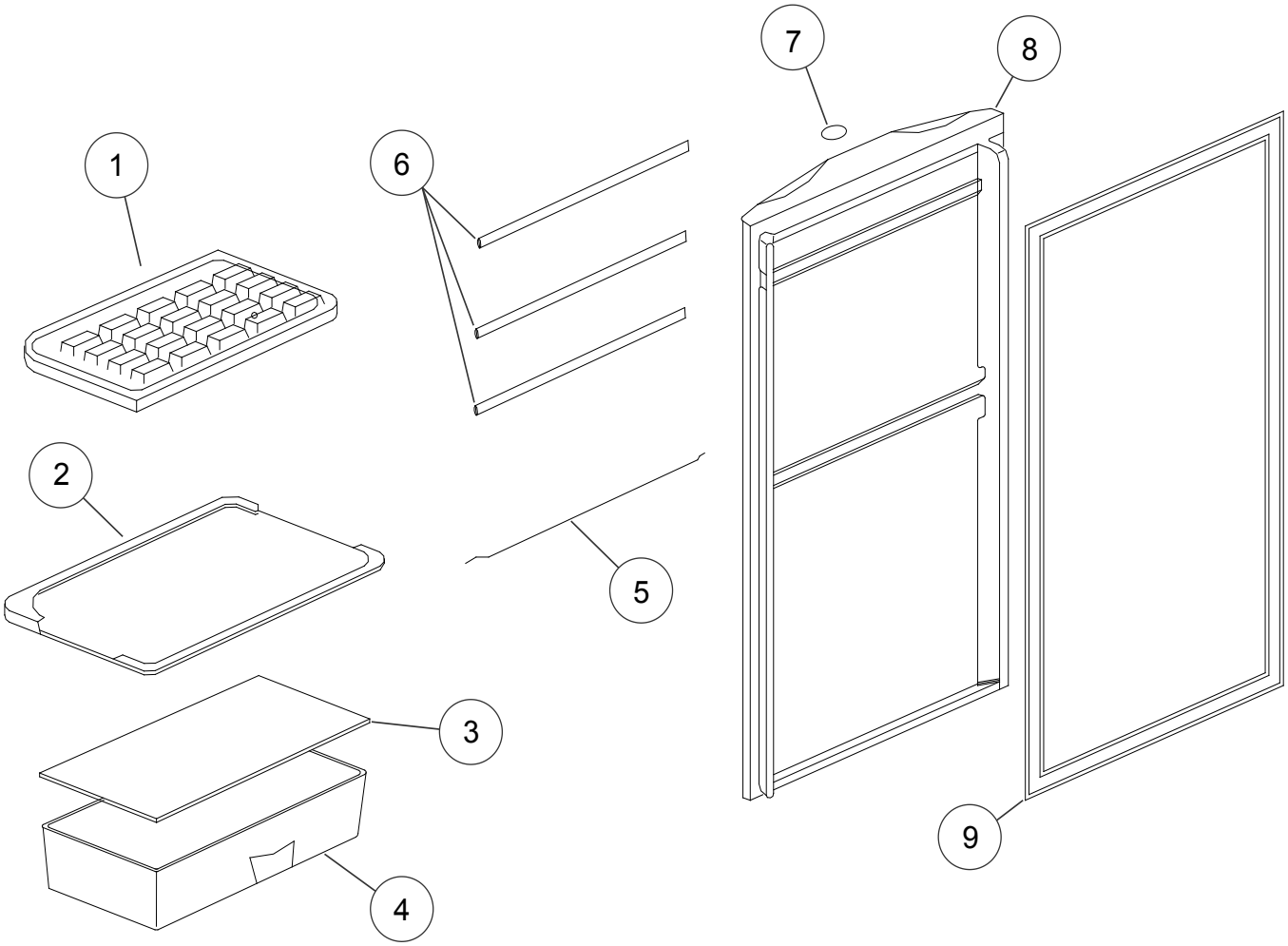

DWG003844

DWG 003844

CABINET COMPONENTS

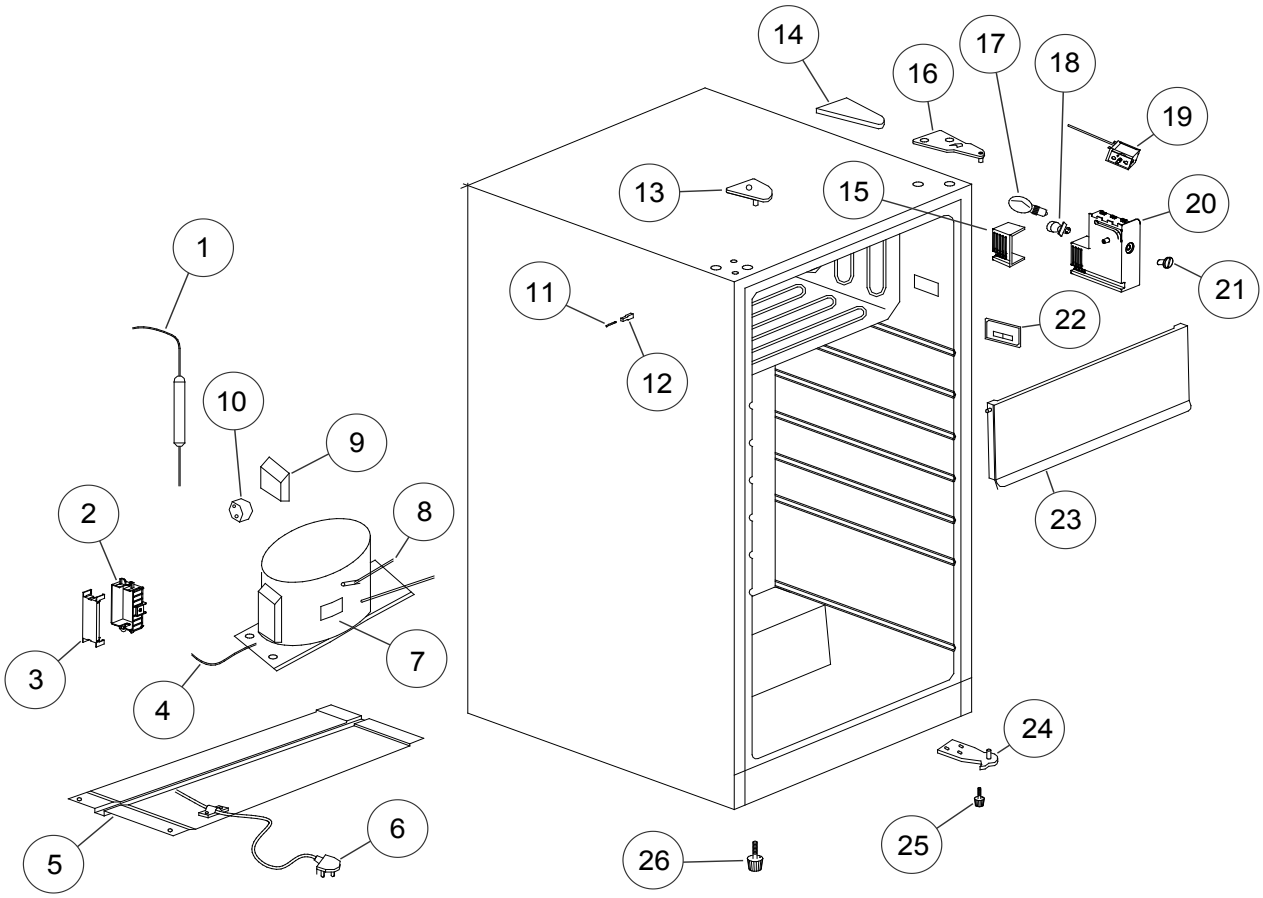

DWG003843

DWG 003843